EN

TITAN

2200W High Pressure Washer

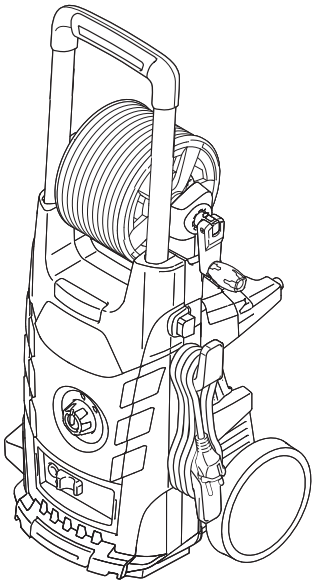

TTB2200PRW

EAN: 5059340124131
Ref. No.: 165KH

CAUTION: Read the instructions before using the product.

BX220IM

Original Instructions_TTB2200PRW_V4_20220221_95817-BH

Let's **get started...**

These instructions are for your safety. Please read through them thoroughly before use and retain them for future reference.

Getting **started...** 03

Safety information 04
Your product 11
Technical specifications 12
Before you **start** 14

In more **detail...** 23

Product functions 24
Operation 27
Care and **maintenance** 31
Troubleshooting 35
Recycling and **disposal** 37
Guarantee 38
EC declaration of **conformity** 40

Safety warnings

1. Machines shall not be used by children. Children should be supervised to ensure that they do not play with the product.
2. This machine can be used by people with reduced physical, sensory or mental capabilities or lack of experience and knowledge if they have been given supervision or instruction concerning use of the machine in a safe way and understand the hazards involved.

Safety warnings for high pressure cleaner

1. WARNING: This product has been designed for use with the cleaning agent supplied or recommended by the manufacturer. The use of other cleaning agents or chemicals may adversely affect the safety of the machine.
2. WARNING: During use of high pressure cleaners, aerosols may be formed. Inhalation of aerosols can be hazardous to health.
3. WARNING: High pressure jets can be dangerous if subject to misuse. Never direct the jet at persons, live electrical equipment or the product itself.
4. WARNING: Do not use the machine within range of persons unless they wear protective clothing.
5. WARNING: Do not direct the jet against yourself or others in order to clean clothes or foot-wear.
6. WARNING: Risk of explosion – Do not spray flammable liquids.
7. WARNING: High pressure cleaners shall not be used by children or untrained personnel.
8. WARNING: High pressure hoses, fittings and couplings are important for the safety of the product. Use only hoses, fittings and couplings recommended by the manufacturer.

9. WARNING: To ensure machine safety, use only original spare parts from the manufacturer or approved by the manufacturer.
10. WARNING: Water that has flowed through backflow preventers is considered to be non-potable.
11. WARNING: Remove the plug from the socket-outlet and disconnected from the power source during cleaning or maintenance and when replacing parts or converting the machine to another function.
12. WARNING: Do not use the machine if a supply cord or important parts of the machine are damaged, e.g. safety devices, high pressure hoses, trigger gun.
13. WARNING: Inadequate extension cords can be dangerous. If an extension cord is used, it shall be suitable for outdoor use, and the connection has to be kept dry and off the ground. It is recommended that this is accomplished by means of a cord reel which keeps the socket at least 60 mm above the ground.
14. WARNING: Always switch off the mains disconnecting switch when leaving the machine unattended.
15. Never use the product with inflammable or toxic liquids, or liquids with characteristics incompatible with its proper operation.
16. Never use the product outdoors in the rain.
17. Never lock the gun trigger in the operating position.
18. Check that the product is fitted with its rating label; contact your dealer if it is missing. Products without rating label must not be used, since they cannot be identified and are potentially hazardous.
19. Never tamper with or adjust the setting of the safety valve or the safety devices.
20. Never change the original diameter of the adjustable nozzle.

Safety warnings

21. Never leave the product unattended when it is running.
22. Do not allow vehicles to drive over the pressure hose.
23. Do not move the product by pulling on the pressure hose.
24. When directed towards tyres, tyre valves or other pressurised components, the high pressure jet is potentially dangerous. Do not apply a jet stream and always keep the nozzle at a distance of at least 30 cm during cleaning.
25. Protect all electrical conductors against the water jet.
26. High pressure may cause parts to rebound: wear all the protective clothing and equipment needed to ensure the operator's safety.
27. Wear appropriate Personnel Protection Equipment (PPE) while operation e.g. safety boots, safety gloves, safety helmets with visors, hearing protection etc.
28. Be aware of kick-back: grip the gun firmly when squeezing the trigger.
29. Comply with the regulations of the local water supply authority. Under EN 12729 (BA) the product can be connected directly to the mains drinking water supply only if the supply hose is fitted with a backflow preventer device with drainage facility.
30. Discharge residual pressure before disconnecting the hose from the product.
31. Check before each use, and at regular intervals, that all metal fasteners are tight and the product's components are in good condition; inspect for broken or worn parts.
32. WARNING: Use only detergents compatible with the high pressure hose cladding materials or other cladding materials.

33. The electric supply connection shall be made by a qualified electrician and comply with IEC 60364- 1. It is recommended that the electric supply to this machine should include a residual current device that will interrupt the supply if the leakage current to earth exceeds 30 mA for 30 ms or a device that will prove the earth circuit.
34. If the supply cord is damaged, it must be replaced by the manufacturer, its service agent or similarly qualified persons in order to avoid a hazard.

The following information applies to professional users only but is good practice for all users:

Vibration and noise reduction

To reduce the impact of noise and vibration emission, limit the time of operation, use low-vibration and low-noise operating modes as well as wear personal protective equipment.

Take the following points into account to minimise the vibration and noise exposure risks:

1. Only use the product as intended by its design and these instructions.
2. Ensure that the product is in good condition and well maintained.
3. Use correct accessories for the product and ensure they are in good condition.
4. Keep tight grip on the handles/grip surface.
5. Maintain this product in accordance with these instructions and keep it well lubricated (where appropriate).
6. Plan your work schedule to spread any high vibration tool use across a longer period of time.

Safety warnings

7. Prolonged use of the product exposes the user to vibrations that can cause a range of conditions collectively known as hand-arm vibration syndrome (HAVS) e.g. fingers going white; as well as specific diseases such as carpal tunnel syndrome. To reduce this risk when using the product, always wear protective gloves and keep your hands warm.

Emergency

Familiarise yourself with the use of this product by means of this instruction manual. Memorise the safety directions and follow them to the letter. This will help to prevent risks and hazards.

1. **Always be alert when using this product, so that you can recognise and handle risks early.** Fast intervention can prevent serious injury and damage to property.
2. **Switch off and disconnect from the power supply if there are malfunctions.** Have the machine checked by a qualified professional and repaired, if necessary, before you operate it again.

Residual risks

Even if you are operating this product in accordance with all the safety requirements, potential risks of injury and damage remain. The following dangers can arise in connection with the structure and design of this product:

1. Health defects resulting from vibration emission if the product is being used over long periods of time or not adequately managed and properly maintained.
2. Injuries and damage to property due to broken attachments or the sudden impact of hidden objects during use.

3. Danger of injury and property damage caused by flying objects.

WARNING! This product produces an electromagnetic field during operation! This field may under some circumstances interfere with active or passive medical implants! To reduce the risk of serious or fatal injury, we recommend persons with medical implants to consult their doctor and the medical implant manufacturer before operating this product!

Symbol

On the product, the rating label and within these instructions you will find among others the following symbols and abbreviations. Familiarise yourself with them to reduce hazards like personal injuries and damage to property.

V~	Volt, (alternating voltage)	kg	Kilogram
Hz	Hertz	dB(A)	Decibel (A-rated)
W	Watt	m/s²	Metres per second squared
/min or min^{-1}	Per minute	MPa	Mega Pascal, pressure unit
mm	Millimetre	bar	Pressure unit
IPX5	The product is protected against water (out of a nozzle) from all directions.		
yyWxx	Manufacturing date code; year of manufacturing (20yy) and week of manufacturing (Wxx).		

Lock / to tighten or secure.

Unlock / to loosen.

Note / Remark.

Caution / Warning.

Symbol

Read the instruction manual.

Wear hearing protection.

Wear eye protection.

Wear respiratory protection.

Wear protective gloves.

Wear protective, slip-resistant footwear.

Switch the product off and disconnect it from the power supply before assembly, cleaning, adjustments, maintenance, storage and transportation.

Always ensure that other people and pets remain at a safe distance from the product when it is in operation. In general, children must not come near the area where the product is.

Do not expose the product to rain or wet conditions.

This product is not suitable for connection to the potable water mains.

Do not direct the water jet onto people, animals, electrical equipment or onto the product itself.

Guaranteed sound power level value in dB.

This product is of protection class II. That means it is equipped with enhanced or double insulation.

The product complies with the applicable European directives and an evaluation method of conformity for these directives was done.

WEEE symbol. Waste electrical products should not be disposed of with household waste. Please recycle where facilities exist. Check with your Local Authority or local store for recycling advice.

UK Conformity Assessed.

Your product

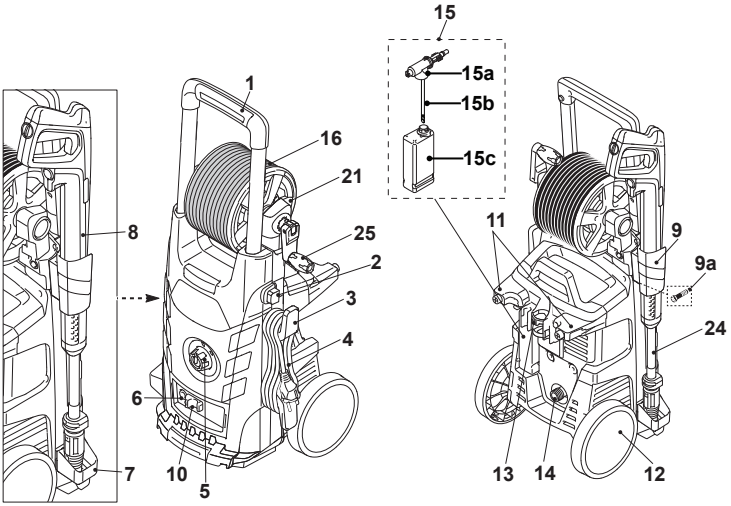

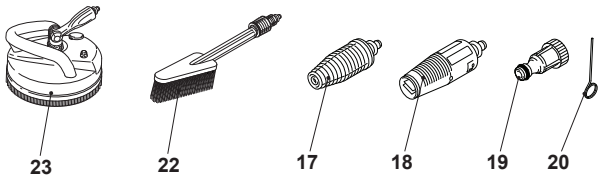

1. Transportation handle
2. Lock-off button
3. Supply cord holder (X2)
4. Supply cord
5. On/off switch I/O
6. Water outlet
7. Lower spray gun holder
8. Spray gun
9. Upper spray gun holder
   a) Fixing screw
10. Fast pressure hose release button
11. Ground support
12. Wheel (x2)
13. Nozzle holder
14. Water inlet
15. Soap tank
    a) Sprayer head
    b) Suction tube
    c) Tank body
16. Pressure hose
17. Rotary nozzle
18. Vario nozzle
19. Water inlet hose adaptor with water filter
20. Cleaning needle
21. Hose reel
22. Rims brush
23. Patio brush
24. Extension lance
25. Winding handle

Technical specifications

General	
> Rated voltage/frequency	: 220 – 240 V ~ / 50 Hz
> Maximum permissible mains impedance	: 0.275 Ω
> Rated input	: 2200 W
> Rated pressure	: 11.5 MPa
> Max. allowable pressure	: 15 MPa
> Max. inlet water pressure	: 1 MPa
> Rated flow	: 5.5 l/min
> Max. rated flow	: 8.33 l/min
> Rated temperature	: 50°C
> Gun kickback force at max. pressure	: 13.9 N
> Protection class	: II ⧈
> Degree of protection	: IPX5
> Weight	: 12.5 kg
> Dimensions	: 420 X 346 X 906 mm
High pressure hose	
> Allowable pressure	: 20 MPa
> Maximum temperature	: 60 °C
> Length	: 8 m
Water hose (not supplied)	
> Quality	: reinforced PVC hose
> Diameter	: min. Ø 12.7 mm (½“)
> Max. length	: 10 m
Sound level	
> Sound pressure level L_{pA}	: 78.8 dB(A)
> Uncertainty K_{pA}	: 2.50 dB(A)
> Measured sound power level L_{WA}	: 90.3 dB(A)
> Uncertainty K_{WA}	: 2.50 dB(A)
> Guaranteed sound power level L_{WA} (acc. to 2000/14/EC amended by 2005/88/EC)	: 93 dB(A)
Vibration level	
> Declared vibration emission value a_{hd}:	: <2.5 m/s²
> Uncertainty K	: 1.0 m/s²

The sound values have been determined according to noise test code given in EN 60335-2-79, using the basic standards ISO 3744 and ISO 11203.
The sound intensity level for the operator may exceed 80 dB(A) and ear protection measures are necessary.
The declared vibration value has been measured in accordance with a standard test method (according to EN 60335-2-79) and may be used for comparing one product with another. The declared vibration value may also be used in a preliminary assessment of exposure.

Starting cycles generate brief voltage drops. Interference with other equipment/ machines may occur in case of unfavourable mains system conditions. Malfunctions are not to be expected for system impedances below 0,275 ohm. Contact your electricity supplier in the case of any uncertainties regarding the mains grid impedance at your electrical connection point.

WARNING! Depending on the actual use of the product the vibration values can differ from the declared total! Adopt proper measures to protect yourself against vibration exposures. Take the whole work process including times the product is running under no load or switched off into consideration. Proper measures include among others regular maintenance and care of the product and cutting attachments, keeping hands warm, periodical breaks and proper planning of work processes.

Rating Label Explanation

TTB2200PRW
TT = TITAN
B = 240V AC
2200 = 2200W
PRW = Pressure washer

Unpacking

WARNING! The product is heavy, ask another person for assistance if required!

1. Unpack all parts and lay them on a flat, stable surface.
2. Remove all packing materials and shipping devices if applicable.
3. Make sure the delivery contents are complete and free of any damage. If you find that parts are missing or show damage do not use the product but contact your dealer. Using an incomplete or damaged product represents a hazard to people and property.
4. Ensure that you have all the accessories and tools needed for assembly and operation. This also includes suitable personal protective equipment.

WARNING! The product and the packaging are not children's toys! Children must not play with plastic bags, sheets and small parts! There is a danger of choking and suffocation!

You will need

(items not supplied)

Suitable personal protective equipment

Water hose

(items supplied)

Supply cord holder (3)

Lower spray gun holder (7)

Spray gun (8)

Upper spray gun holder (9)

Fixing screw (9a)

Soap tank (15)

Rotary nozzle (17)

Vario nozzle (18)

Water inlet hose adaptor with water filter (19)

Cleaning needle (20)

Rims brush (22)

Patio brush (23)

Extension lance (24)

Assembly

WARNING! The product must be fully assembled before operation! Do not use a product that is only partly assembled or assembled with damaged parts!

Follow the assembly instructions step-by-step and use the pictures provided as a visual guide to easily assemble the product!
Do not connect the product to power supply before it is completely assembled!

NOTE: Take care of small parts that are removed during assembly or when making adjustments. Keep them secure to avoid loss.

Holders

> Attach the two supply cord holders (3) to the product (Fig. 1). Ensure it engaged properly.
> Slide the upper spray gun hold (9) to the product and secure it with the screw (9a) (Fig. 2).
> Attach the lower spray gun holder (7) to the product. Ensure it engaged properly.

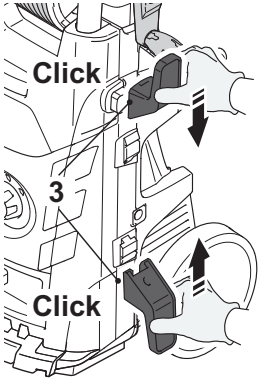

Fig. 1

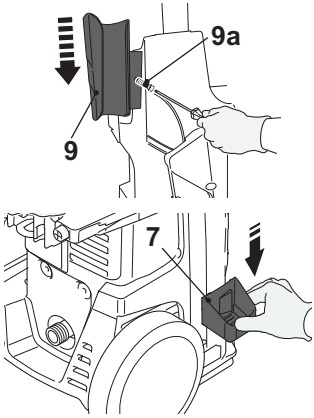

Fig. 2

Pressure hose

> Insert the connector (16a) of the pressure hose (16) into the hose connection port (8a) of the spray gun (8). Ensure it snaps in place (Fig. 3). Press the release button (8b) to unlock if necessary.
> Insert the other connector (16b) of the pressure hose (16) into the water outlet (6). Ensure it snaps in place (Fig. 4). Press the release button (10) to unlock if necessary.

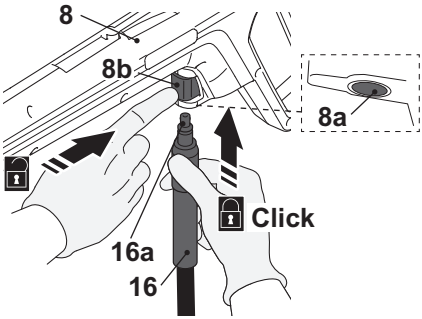

Fig. 3

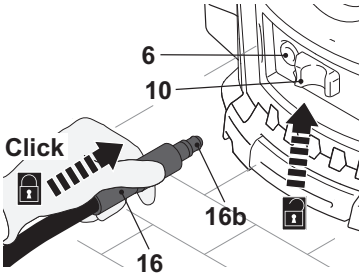

Fig. 4

Assembly

Soap tank

> Align the suction tube (15b) to sprayer haed (15a) and inset it. Ensure it engaged properly. (Fig. 26-1).

> Insert the sprayer head in the tank body (15c) and securely fit the tank body by turning it clockwise to lock it in place(Fig. 26-2).

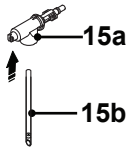

Fig. 26-1

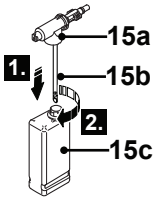

Fig. 26-2

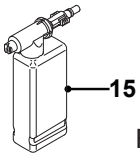

Fig. 26-3

Accessories

An extension lance (24) and several accessories are supplied with this product. Please check the technical specification of any accessories that you purchase to ensure they are compatible with this product.

Illustration	Description	Application
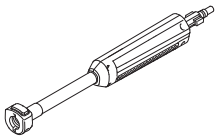	Extension lance (24)	To be used in conjunction with the spray gun and nozzle.
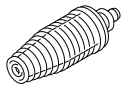	Rotary nozzle (17)	To be used for high pressure cleaning in conjunction with the extension lance.
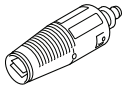	Vario nozzle (18)	Fan and pin jet to be used in conjunction with the extension lance.
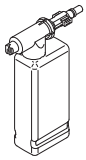	Soap tank (15)	Low pressure setting to apply detergent. To be used in conjunction with the spray gun.
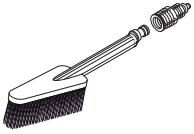	Rims brush (22) with adaptor (22a)	Cleaning of wheels and rims on vehicles. To be used in conjunction with the extension lance.

	Patio brush (23)	Cleaning of floors, e.g. garden path or courtyards. To be used in conjunction with the extension lance

Attaching accessories

> Align the tongues (24a) of the extension lance (24) with the grooves of the connection port of the spray gun (8) and insert it. (Fig. 5, step 1).
> Securely fit the extension lance (24) by turning it clockwise to lock it in place (Fig. 5, step 2). Ensure the arrow on the spray gun aligns with the arrow on the extension lance.
> Align the tongues (17a) of the nozzle with the grooves of the connection port of the extension lance (24) (Fig. 6).
> Insert the nozzle into the connection port all the way to the end. Ensure it engaged properly.

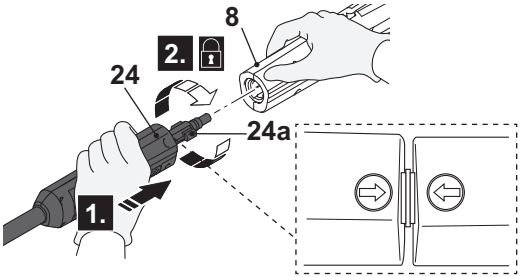

Fig. 5

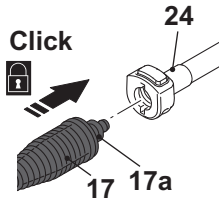

Fig. 6

Removing accessories

> Press the release button (24b) (Fig. 7, step 1) and remove the nozzle (step 2).
> Press the extension lance (24) towards the spray gun (8) and turn it anti-clockwise to remove it (Fig. 8).

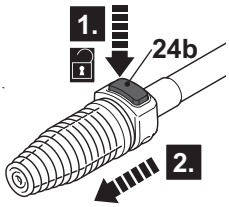

Fig. 7

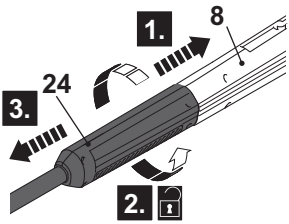

Fig. 8

Accessories

Rotary nozzle

> The high pressure rotary nozzle is intended for maximum cleaning effect. Keep the spray wand 15-20 cm away from the surface being cleaned at all times.
> Always attach the extension lance (24) when using the rotary nozzle (17).

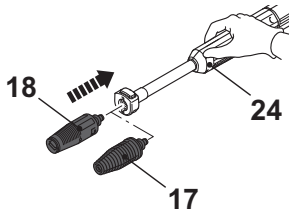

Fig. 9

Vario nozzle

> The vario nozzle is intended for a large choice of applications and cleaning effects.
> Always use the vario nozzle (18) with the extension lance (24) attached (Fig. 9).
> Turn the vario nozzle to adjust the water jet according to the surface to be cleaned (Fig. 10).
> Use the fan spray to clean wood decks, siding, vehicles etc.
> Always start using the fan spray and begin spraying from a minimum 30 cm away to avoid damaging the surface of the material being cleaned.
> Use the pin spray for maximum cleaning effect.

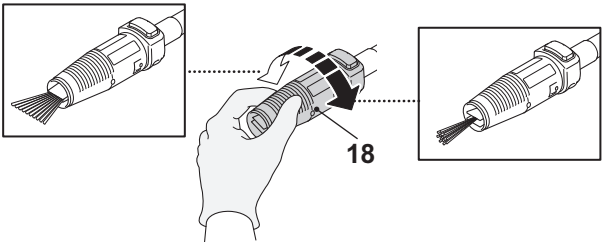

Fig. 10

Rims brush

The rims brush is specially designed to clean rims and vehicle wheels.

1. Attach the extension lance (24) onto the spray gun (8) (Fig. 11).
2. Attach the rims brush (22) onto the extension lance.
3. Slightly rotate the rims brush to ensure it faces the proper position if necessary.

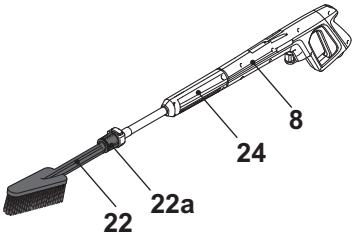

Fig. 11

Patio brush

The patio cleaner is specially designed to clean large flat surfaces.

1. Always attach the extension lance (24) when using the patio brush.
2. Align and insert the tongues (24a) of the extension lance (24) into the grooves of the spray gun (8) connection port (Fig. 12, step 1).
3. Securely fit the extension lance (24) by turning it clockwise to lock it in place (step 2). Ensure the arrow on the spray gun aligns with the arrow on the extension lance.

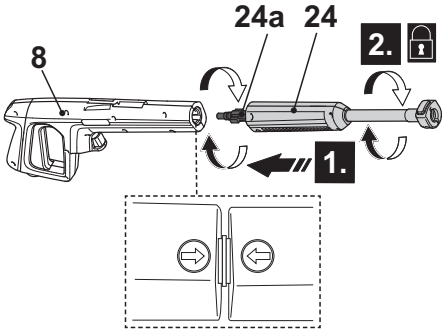

Fig. 12

4. Attach the patio brush (23) onto the extension lance (24) (Fig. 13).
5. The angle of the connector (23a) can be adjusted as required.

Accessories

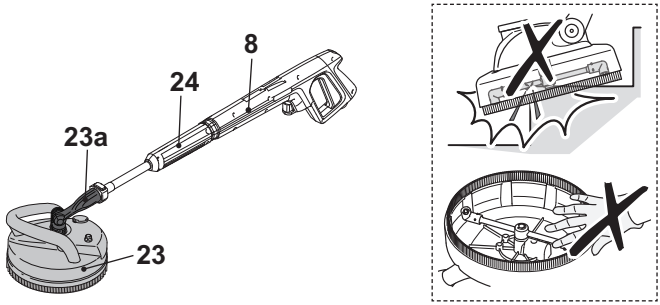

Fig. 13

WARNING! The patio brush is only intended to be used on flat patio surfaces! Do not attempt to use it on steps or use it vertically on walls. Never attempt to touch the rotating nozzle or parallel use while operating.

6. Open the cap (23b) and fill in suitable detergent and close the cap afterwards (Fig. 14).

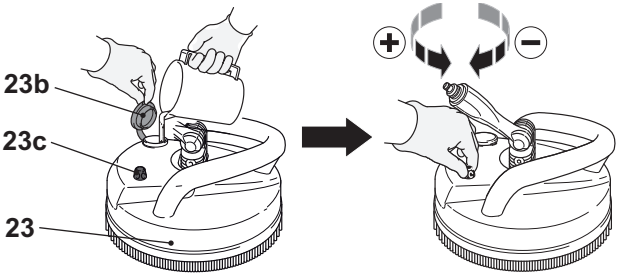

Fig. 14

NOTE: Only use mild, environmentally friendly detergents. Never use aggressive chemicals, abrasive detergents or similar to avoid damage to your health, the product and the environment.

WARNING! Avoid skin contact with detergents, in particular contact with eyes! If detergent gets in your eyes, flush your eyes with clean water and seek immediate medical attention!

7. Adjust the detergent flow with the knob (23c).

Soap tank

Some cleaning tasks can be completed with water alone, but for most tasks it is advantageous to use a detergent. A detergent ensures a quick soaking of the dirt allowing the high pressure water to penetrate and remove dirt more effectively.

> Loosen the soap tank cap. Put proper detergent into the tank and then tighten the cap afterwards.
> Align and insert the tongues (15a) of the soap tank (15) with the grooves of the connection port of the spray gun (8) . (Fig. 15, step 1).
> Securely fit the soap tank by turning it clockwise to lock it in place (Fig. 15, step 2).
> During operation the detergent mixes automatically with water and is released through the detergent nozzle (15b).

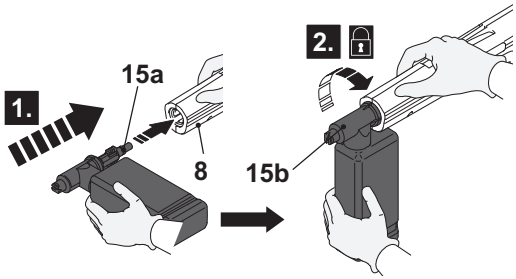

Fig. 15

NOTE: Only use mild, environmentally friendly detergents. Never use aggressive chemicals, abrasive detergents or similar to avoid damage to your health, the product and the environment.

WARNING! Avoid skin contact with detergents, in particular contact with eyes! If detergent gets in your eyes, flush your eyes with clean water and seek immediate medical attention!

Connection to water supply

WARNING! This product is not intended to be connected to the potable water mains!
Observe the regulations of your local utility company when connecting the product to a water supply line! It is prohibited to connect this product to the drinking water facility without a backflow preventer which corresponds to EN 12729 Type BA or EN 61770! Make sure that the hose is at least a diameter of min. Ø 12.7 mm (1/2“) and is reinforced!

Connection to water supply

> Attach the water hose adaptor (19) on the water inlet (14).
> Attach a suitable water hose (not included) onto the water supply and then the other end onto the water hose adaptor (19) (Fig. 16).

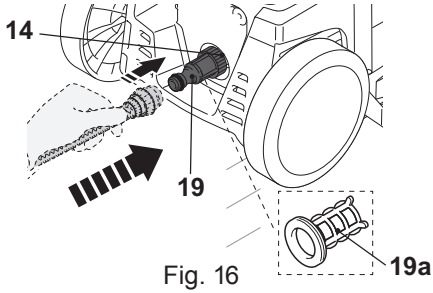

Fig. 16

NOTE: The adaptor (19) contains filters (19a) to protect the product against larger particles. Ensure the filters are fixed appropriately in position. Do not use the water inlet and the adaptor without filter.

> Open the water supply.

Connection to power supply

> Make sure the on/off switch (5) is in its off position (“0”).
> Connect the plug with a suitable socket.

WARNING! Check the voltage! The voltage must comply with the information on the rating label!
If using an extension cord it must be suitable for outdoor use with sockets protected against water splashing. Ensure the extension cord is of the proper size and type for your product (≥ 1.5 mm^2)!

WARNING! The electric supply connection shall be made by a qualified electrician and comply with IEC 60364-1. It is recommended that the electric supply to this machine should include a residual current device that will interrupt the supply if the leakage current to earth exceeds 30 mA for 30 ms or a device that will prove the earth circuit.

> Your product is now ready to be used.

In more detail...

Product functions 24

Operation 27

Care and **maintenance** 31

Troubleshooting 35

Recycling and **disposal** 37

Guarantee 38

EC declaration of **conformity** 40

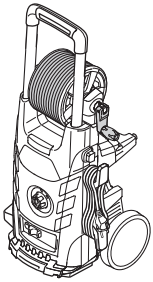

Intended use

This high pressure washer TTB2200PRW is designated with a rated input of 2200 Watts.
The intended use of this product covers the cleaning of vehicles, buildings, terraces, facades and garden equipment using clean water and biodegradable chemical detergents. Likewise you can remove sticky dirt, for example from paving slabs or rain gutters.
This product must not be used to clean clothing, shoes and other textiles. The water jet should not be directed against persons, animals, any electrical equipment or on the product itself. Do not flush any objects which contain health hazardous materials (e. g. asbestos). Do not run the product with inflammable, explosive and toxic liquids.
For safety reasons it is essential to read the entire instruction manual before first operation and to observe all the instructions therein.

Winging handle and hose reel

Use the winding handle to rotate the hose reel. The hose reel is used to store the pressure hose.

1. Unfold the winding handle (25) to unlock the hose reel (21) (Fig. 17).
2. Pull out the pressure hose (16) from the hose reel (21) for operation.
3. Turn the winding handle (25) clockwise to wind up the pressure hose (16) for storage. Release the pressure in the hose before winding up the hose: turn product off using the control dial and press gun trigger until the pressure is released.
4. Fold the winding handle to lock the hose reel.

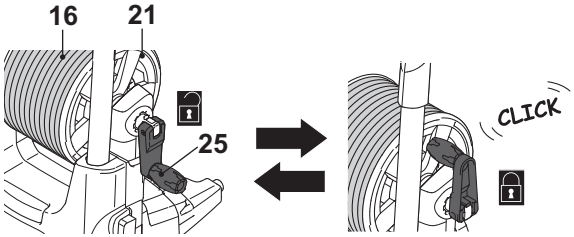

Fig. 17

NOTE: Always unwind the complete hose for operation to avoid damage and injuries.

Holders

Supply cord holder

Use the supply cord holder (3) to store the supply cord (4) (Fig. 18).

Spray gun holder

Use the upper spray gun holder (9) and lower spray gun holder (7) to store the spray gun (8), extansion lance (24) and vario nozzle (18) (Fig. 18).

Accessories holder

Accessories (soap tank (15), rotary nozzle (17)) can be stored at the back of the product. (Fig. 18).

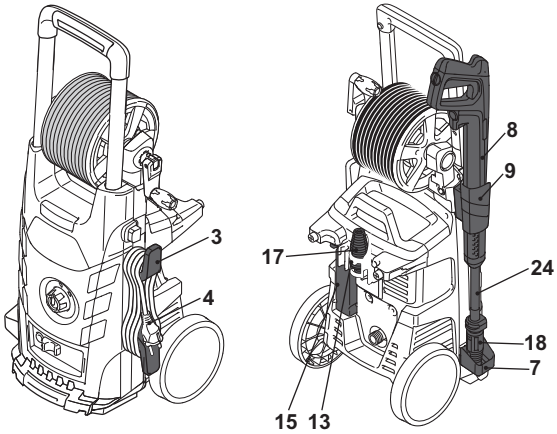

Fig. 18

Transportation handle

> Press the lock-off button (2) to unlock the transportation handle (1) (Fig. 19, step 1).
> Move the transportation handle (1) to required position (high/low position) (step 2).
> Ensure the handle is engaged properly and the lock-off button goes back to default position (step 3).

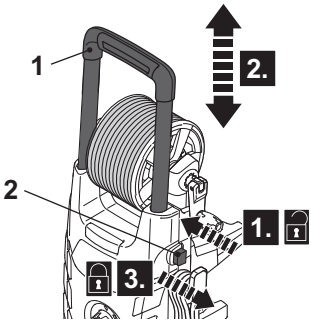

Fig. 19

On/off switch

> Set the on/off switch (5) in its “1” position to start the product (Fig. 20, A).
> Set the on/off switch (5) in its “0” position to switch off the product (Fig. 20, B).

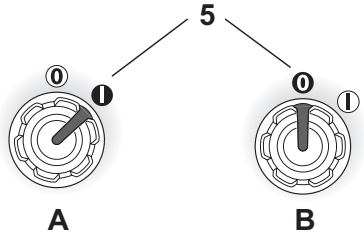

Fig. 20

Trigger lock

The spray gun (8) is equipped with a trigger lock (8a) in order to prevent accidental activation of the trigger (8b).

Activate the trigger lock

When the trigger lock (8a) is in locked position, the spray gun trigger (8b) is disabled (Fig. 21, A).
Use the trigger lock when the product is not in use, when it is left unattended or during assembly of additional accessories.

Deactivate the trigger lock

When the trigger lock (8a) is in unlocked position, the spray gun trigger (8b) is enabled and ready for use (Fig. 21, B).
Press the trigger, a water jet sprays out of the nozzle. Release the trigger to stop the water jet.

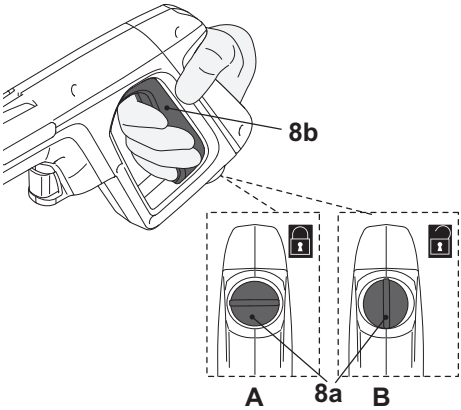

Fig. 21

Overload cut-out

In case it is overloaded, the motor stops. In this case, switch the product off, remove the mains plug and let it cool down for 10 minutes, then repeat the startup procedure as described in below chapter-“operation”.
If the problem recurs more than once, contact your authorised service centre.

Safety valve

The safety valve is a pressure limiting valve. When the trigger (8b) is released, the valve opens and discharges the pressure inside the pump.

Automatic motor start-stop device

The automatic motor start-stop device is operated by the trigger (8b) of the spray gun (8). When the trigger (8b) is released the dynamic pressure automatically cuts out the motor. When the trigger (8b) is depressed the automatic drop in pressure starts the motor and the pressure is restored after a very slight delay.

General operation

> Check the product, its power cord and plug as well as accessories for damage before each use. Do not use the product if it is damaged or shows wear.
> Double check that the accessories and attachments are properly fixed.
> Always hold the spray gun by its handle and gripping surface. Keep the handle and gripping surface dry and free from lubricant to ensure safe support.
> Ensure that the air vents are always unobstructed and clear. Clean them if necessary with a soft brush. Blocked air vents may lead to overheating and damage the product.
> Switch the product off immediately if you are disturbed while working by other people entering the working area. Always let the product come to complete stop before averting.
> Do not overwork yourself. Take regular breaks to ensure you can concentrate on the work and have full control over the product.

Operation

WARNING! Do not operate the product with a closed water tap! This leads to dry running and subsequently damages the product!
Kickback forces result from squeezing the trigger! Therefore, always hold the spray gun with both hands!
Pay attention to safe posture! Improper handling can lead to injuries!

WARNING! Do not operate the product when the ambient temperature is below 0 °C. Water will freeze inside the product and damage it.

> Connect the product to water supply as described.
> Turn on the water tap fully.
> Hold the spray gun (8) with both hands.
> Direct the nozzle away from yourself towards the surface to be cleaned (Fig. 22).
> Unlock the trigger (8b) and squeeze it until a constant amount of water flows through the nozzle to allow air trapped in the hose to escape.
> Release the trigger and switch the product on.
> Hold the spray gun (8) with both hands. Direct the water jet to the object to be cleaned and squeeze the trigger.

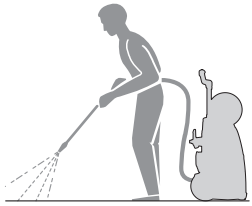

Fig. 22

WARNING! Beware of kickback when squeezing the trigger!

NOTE: Always keep a reasonable distance between the nozzle and the object to be cleaned in order to avoid damage. Ask your specialist dealer for advice if required.

> Release the trigger to stop the water jet.

Tips

WARNING! Prevent water from penetrating the air vents of the product to minimise the risk of damage to the product.

> Dissolve dirt by applying the detergent mixed with water to the surface while still dry. Allow the detergent to rest on the surface for a few minutes, but do not let the detergent dry.
> When dealing with vertical surfaces work from the bottom upwards. Rinse from the bottom upward, use the high pressure jet at a minimum distance of 30 cm at 45° angle and then from the top downward.
> In some cases, scrubbing with brushes is needed to remove dirt. High pressure is not always the best solution for good washing results, since it may damage some surfaces. The highest nozzle jet setting should not be used on delicate or painted parts, or on pressurised components (e. g. tyres, inflation valves, etc.).
> Effective washing depends on both the pressure and volume of the water used, to the same degree.
> Begin by spraying in a testing area free and clear of people and objects.

Wood and vinyl decks

> Reduce your work area to smaller sections and clean each section one at a time for optimal results.
> Rinse at high pressure using fan spray, keeping the nozzle at least 15 - 25 cm from the cleaning surface.
> Maintain a further distance from the cleaning area when using jet spray.
> Caution! Increase the distance from the cleaning area for softer woods.

Cement patios, stone, and brick

> Rinse at high pressure using fan spray in a sweeping motion, keeping the nozzle at least 7 - 15 cm from the cleaning surface.
> Maintain a further distance from the cleaning area when using jet spray.

Cars, boats, and motorcycles

> Clean one side at a time to achieve the best results.
> Rinse at high pressure using fan spray in a sweeping motion, keeping the nozzle at least 20 cm from the cleaning surface. Do not use narrow pencil jet on vehicle or boat paint work.
> Wipe surface dry for a polished finish.
> WARNING! Do not clean the engine with this product!

After use

> Release the trigger (8b) (Fig. 23).
> Turn the on/off switch to “**0**” position.
> Turn off the water tap.
> Squeeze the trigger to release the pressure still present in the product.

WARNING! Only separate the high-pressure hose from the spray gun and the water hose from the product when no more pressure exists in the system! Also ensure that the product is turned off and separated from power supply!

> Lock the trigger.

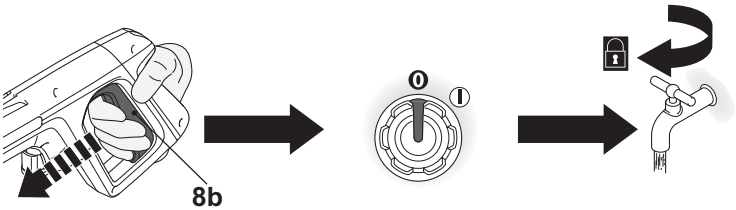

Fig. 23

> Separate the water hose from the water supply and then from the water inlet hose adaptor with water filter (19).
> Wind the pressure hose (16) onto the hose reel (21). Ensure that the hose is not bent or twisted but winded up evenly.
> Dismantle the accessories in the reverse sequence of the assembly instructions if you are not going to use this product for a long period of time.
> Check, clean and store the product as described below.

The golden rules for care

WARNING! Always squeeze the trigger to release the pressure still present in the product first.
Always switch the product off, disconnect it from the power supply and let the product cool down before performing inspection, maintenance and cleaning work!

> Keep the product clean. Remove debris from it after each use and before storage.
> Regular and proper cleaning will help ensure safe use and prolong the life of the product.
> Inspect the product before each use for worn and damaged parts. Do not operate it if you find broken and worn parts.

WARNING! Only perform repairs and maintenance work according to these instructions! All further works must be performed by a qualified specialist!

General cleaning

> Clean the product with a slightly damp cloth and mild soap. Use a brush for areas that are hard to reach.
> In particular clean the air vents after every use with a cloth and brush.
> Remove stubborn dirt with high pressure air (max. 3 bar).

NOTE: Do not use chemical, alkaline, abrasive or other aggressive detergents or disinfectants to clean this product as they might be harmful to its surfaces.

> Check for any damage and wear. Repair damages in accordance with this instruction manual or take it to an authorised service centre before using the product again.

Maintenance

Before and after each use, check the product and accessories (such as application tools) for wear and damage. If required, exchange them for new ones as described in this instruction manual. Observe the technical requirements.

Spare parts/Replacement parts

The following parts of this product may be replaced by the consumer. Spare parts are available at an authorized dealer or through our customer service.

Description	Model no. or Specification

Nozzle

Remove any dirt deposits from the nozzle (17/18) hole using the cleaning needle (20) (Fig. 24).

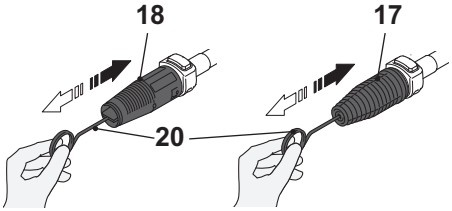

Fig. 24

Water filter

> Before each use check the water filter is clean.
> Unscrew and remove the water inlet hose adaptor with water filter (19) from the water inlet (14).
> Disassemble the water inlet hose adaptor with water filter (19) (Fig. 25-1).
> Rinse the water filter (19a) with clear water(Fig. 25-2).

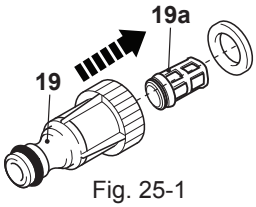

Fig. 25-1

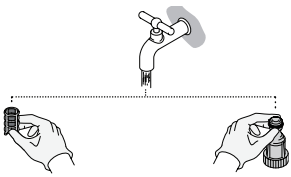

Fig. 25-2

Decalcification

From time to time – according to the nature of your tap water – calcium deposits form in the product and accessories. The strength of the deposits (and thus the frequency of decalcification) depends upon the degree of hardness of the water and how often the product is used. Check with your supplier in order to find the hardness of the water in your area.

NOTE: Use a mixture of water and citric acid or vinegar for decalcification. These substances are readily biodegradable and environmentally friendly!

> Make a mixture of one part of proper vinegar and two parts hot water (≤ 50°C) in a suitable container, e. g. in a bowl.
> Lay the detachable accessories in the mixture.
> Leave the accessories in the mixture for approximately 12 hours.
> Rinse the accessories with clear water.

Power cord

If the supply cord is damaged, it must be replaced by the manufacturer, its service agent or similarly qualified persons in order to avoid a hazard.

UK plug

If you need to replace the fitted plug, then follow the instructions below.
IMPORTANT: The wires in the mains lead are coloured in accordance with the following code:
Blue – Neutral Brown – Live
As the colours of the wire in the mains lead of this product may not correspond with the coloured marking identifying the terminals in your plug, proceed as follows. The wire, which is coloured blue, must be connected to the terminal, which is marked with N or coloured black. The wire, which is coloured brown, must be connected to the terminal, which is marked L or coloured red.

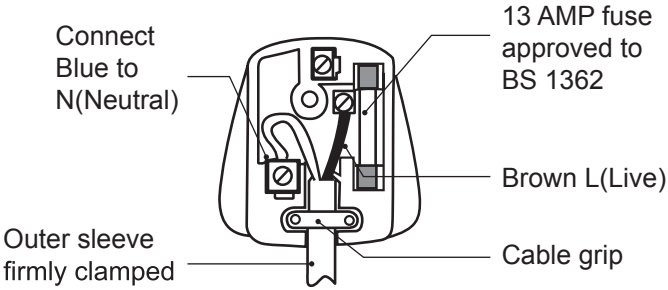

UK plug

WARNING! Never connect live or neutral wires to the earth terminal of the plug, which is marked with E.
Only fit an approved 13 Amp BS 1363 or BS 1363/A plug and the correctly rated fuse. If in doubt, consult a qualified electrician.
If a moulded plug is fitted and has to be removed take great care in disposing of the plug and severed cable, it must be destroyed to prevent engaging into a socket.

Repair

This product does not contain any parts that can be repaired by the consumer. Contact an authorised service centre or a similarly qualified person to have it checked and repaired.

Storage

> Switch the product off and disconnect it from the power supply.
> Disconnect the product from the water supply.
> Clean the product as described above.
> Store the accessories at the back of the product.
> Drain remaining water and wash out the soap tank at the end of the working session.
> Store the product and its accessories in a dry, frost-free place.
> Always store the product in a place that is inaccessible to children. The ideal storage temperature is between 10 °C and 30 °C
> Place the product flat on the ground, support the product with the wheels and ground support (11) if necessary.
> We recommend using the original package for storage or covering the product with a suitable cloth or enclosure to protect it against dust.

Transportation

Switch the product off and disconnect it from the power supply.
Disconnect the product from the water supply.
Attach transportation guards, if applicable.
Tilt the product towards you until it balances on the wheels. Then move it by its transportation handle (1).
Protect the product from any heavy impact or strong vibrations which may occur during transportation in vehicles.
Secure the product to prevent it from slipping or falling over.

Troubleshooting

Suspected malfunctions are often due to causes that the users can fix themselves. Therefore check the product using this section. In most cases the problem can be solved quickly.

WARNING! Only perform the steps described within these instructions! All further inspection, maintenance and repair work must be performed by an authorised service centre or a similarly qualified specialist if you cannot solve the problem yourself!

Problem	Possible cause	Solution
1. Product does not start	1.1. Not connected to power supply 1.2. Power cord or plug is defective 1.3. Other electrical defect to the product 1.4. Trigger lock has not been deactivated 1.5. Nozzle clogged	1.1. Connect to power supply 1.2. Contact your nearest authorised service centre 1.3. Contact your nearest authorised service centre 1.4. Unlock the trigger 1.5. Clean the nozzle
2. Product does not reach full power	2.1. Extension cord not suitable for operation with this product 2.2. Power source (e.g. generator) has too low voltage 2.3. Air vents are blocked 2.4. Water inlet volume is too low 2.5. High-pressure hose is leaking 2.6. Seals worn 2.7. Inlet water filter is dirty 2.8. Air being sucked into the system	2.1. Use a proper extension cord 2.2. Connect to another power source 2.3. Clean the air vents 2.4. Increase water inlet quantity 2.5. Replace high-pressure hose 2.6. Contact your nearest authorised service centre 2.7 Clean the filter 2.8 Check tightness of hose fittings

In more detail...

Troubleshooting

Problem	Possible cause	Solution
3. Oil leak	3.1. Seals worn	3.1. Contact your nearest authorised service centre
4. Strong pressure fluctuations	4.1. Nozzle clogged 4.2. Water inlet volume is too low 4.3. High-pressure hose is leaking 4.4. Seals worn 4.5. Inlet water filter dirty 4.6. Air being sucked into the system	4.1. Clean the nozzle 4.2. Increase water inlet quantity 4.3. Replace high-pressure hose 4.4. Contact our nearest authorised service centre 4.5. Clean the filter 4.6. Check thickness of hose fittings
5. Water leakage from product	5.1. Seals worn	5.1. Contact your nearest authorised service centre
6. Excessive vibration/noise	6.1. Screws and nuts loosened 6.2. Motor problems 6.3. Water inlet volume is too low	6.1. Check screws and nuts for tightness and retighten as necessary 6.2. Contact your nearest authorised service centre 6.3. Increase water inlet quantity
7. No detergent taken in	7.1. Soap tank not attached 7.2. Detergent too dense 7.3. Deposits or restriction in detergent circuit	7.1. Attach the soap tank 7.2. Dilute with water 7.3. Flush with clean water and eliminate any restrictions. If the problem persists, contact an authorised service centre

Problem	Possible cause	Solution
8. No water jet	8.1. Trigger is not squeezed 8.2. Trigger lock is activated 8.3. No water supply 8.4. Inlet water filter is dirty 8.5. Hose blocked 8.6. Nozzle blocked	8.1. Squeeze the trigger 8.2. Deactivate the trigger lock 8.3. Check water supply 8.4. Clean filter 8.5. Check hose 8.6. Check nozzle

Recycling and disposal

Waste electrical products should not be disposed of with household waste. Please recycle where facilities exist.
Check with your Local Authority or local store for recycling advice.

The product comes in a package that protects it against damage during shipping. Keep the package until you are sure that all parts have been delivered and the product is working properly. Recycle the package afterwards.

Guarantee

We take special care to select high quality materials and use manufacturing techniques that allow us to create products incorporating design and durability. This product TTB2200PRW has a manufacturer's guarantee of 2 years against manufacturing defects, from the date of purchase (if bought in store) or date of delivery (if bought online), at no additional cost.

To make a claim under this guarantee, you must present your proof of purchase (such as a sales receipt, purchase invoice or other evidence admissible under applicable law), please keep your proof of purchase in a safe place. For this guarantee to apply, the product you purchased must be new, it will not apply to second hand or display products. Unless stated otherwise by applicable law, any replacement product issued under this guarantee will only be guaranteed until expiry of the original guarantee period.

This guarantee covers product failures and malfunctions provided the product was used for the purpose for which it is intended and subject to installation, cleaning, care and maintenance in accordance with the information contained in these terms and conditions, in the user manual and standard practice, provided that standard practice does not conflict with the user manual.

This guarantee does not cover defects and damage caused by normal wear and tear or damage that could be the result of improper use, faulty installation or assembly, neglect, accident, misuse, or modification of the product. Unless stated otherwise by applicable law, this guarantee will not cover, in any case, ancillary costs (shipping, movement, costs of uninstalling and reinstalling, labour etc), or direct and indirect damage.

This guarantee does not cover defects and damage caused by or resulting from:

- Normal wear and tear
- Overload, misuse or neglect
- Repairs attempted by anyone other than an authorised agent
- Cosmetic damage
- Damage caused by foreign objects, substances or accidents
- Accidental damage or modification
- Failure to follow manufacturer's guidelines
- Loss of use of the goods

If the product is defective, we will, within a reasonable time, repair or replace it.

Rights under this guarantee are enforceable in the country in which you purchased this product. Guarantee related queries should be addressed to the store you purchased this product from.
The guarantee is in addition to and does not affect your statutory rights.

(EN) EU DECLARATION OF CONFORMITY
(FR) DÉCLARATION UE DE CONFORMITÉ
(PL) DEKLARACJA ZGODNOŚCI UE
(RO) DECLARAȚIA DE CONFORMITATE UE
(DE) EU-KONFORMITÄTSERKLÄRUNG
(ES) DECLARACIÓN UE DE CONFORMIDAD
(PT) DECLARAÇÃO DE CONFORMIDADE UE

Product/ Produit/ Produkt/Produsul/Produkt/Producto/Produto

- Product name – High Pressure Washer/ Nettoyeur haute pression/ Myjka ciśnieniowa/ Aparat de spălat cu înaltă presiune/ Hochdruckreiniger/ Hidrolimpiadora de alta presión/ Lavadora a alta pressão
- Product model – TTB2200PRW
- Type / batch or serial number range 000001 to 999999

Name and address of the manufacturer or his authorised representative:
Nom et adresse du fabricant ou de son mandataire:
Nazwa i adres producenta lub jego upoważnionego przedstawiciela:
Denumirea și adresa producătorului sau a reprezentantului său autorizat:
Name und Anschrift des Herstellers oder seines Bevollmächtigten:
Nombre y dirección del fabricante o de su representante autorizado:
Nome e endereço do fabricante ou do respetivo mandatário:

Kingfisher International Products B.V.,
Rapenburgerstraat 175E,
1011 VM Amsterdam,
The Netherlands

This declaration of conformity is issued under the sole responsibility of the manufacturer.
La présente déclaration de conformité est établie sous la seule responsabilité du fabricant.
Niniejsza deklaracja zgodności wydana zostaje na wyłączną odpowiedzialność producenta.
Prezenta declarație de conformitate este emisă pe răspunderea exclusivă a producătorului.
Die alleinige Verantwortung für die Ausstellung dieser Konformitätserklärung trägt der Hersteller.
La presente declaración de conformidad se expide bajo la exclusiva responsabilidad del fabricante.
A presente declaração de conformidade é emitida sob a exclusiva responsabilidade do fabricante.

Object of the declaration/Objet de la declaration/Przedmiot deklaracji/Obiectul declarației/Gegenstand der Erklärung/Objeto de la declaración/Objeto da declaração

Product/Produit/Produkt/Produsul/Produkt/ Producto/ Produto	Model/Modèle/Model/Modelul/Modell/ Modelo/ Modelo	EAN
High Pressure Washer/ Nettoyeur haute pression/ Myjka ciśnieniowa/ Aparat de spălat cu înaltă presiune/ Hochdruckreiniger/ Hidrolimpiadora de alta presión/ Lavadora a alta pressão	TTB2200PRW	5059340124131

The object of the declaration described above is in conformity with the relevant Union harmonisation legislation:
L'objet de la déclaration décrit ci-dessus est conforme à la législation d'harmonisation de l'Union applicable:
Wymieniony powyżej przedmiot niniejszej deklaracji jest zgodny z odnośnymi wymaganiami unijnego prawodawstwa harmonizacyjnego:
Obiectul declarației descris mai sus este în conformitate cu legislația relevantă de armonizare a Uniunii:
Der oben beschriebene Gegenstand der Erklärung erfüllt die einschlägigen Harmonisierungsrechtsvorschriften der Union:
El objeto de la declaración descrita anteriormente es conforme con la legislación de armonización pertinente de la Unión:
O objeto da declaração acima descrito está em conformidade com a legislação de harmonização da União aplicável:

2006/42/EC	Machinery Directive
2014/30/EU	Directive Electromagnetic compatibility
2000/14/EC	Outdoor Noise Directive
2011/65/EU,(EU) 2015/863	Directive Restriction of the use of certain hazardous substances in electrical and electronic equipment

2006/42/CE en tant que directive modifiée sur les machines
2014/30 / UE telle que modifiée Directive Compatibilité électromagnétique
2000/14/CE en tant que directive modifiée sur le bruit extérieur
Directive 2011/65 / UE,(UE) 2015/863 telle que modifiée Limitation de l'utilisation de certaines substances dangereuses dans les équipements électriques et électroniques
2006/42/WE w zmienionej dyrektywie maszynowej
2014/30 / UE ze zmianami Dyrektywa Kompatybilność elektromagnetyczna
2000/14/WE w zmienionej dyrektywie w sprawie hałasu na zewnątrz
2011/65 / UE,(UE) 2015/863 ze zmianami Dyrektywa Ograniczenie stosowania niektórych niebezpiecznych substancji w sprzęcie elektrycznym i elektronicznym
2006/42/CE, astfel a fost modificată Directiva privind echipamentele
2014/30/UE, astfel a fost modificată Directiva privind compatibilitatea electromagnetică

2000/14/CE, astfel a fost modificată Directiva privind zgomotul în aer liber
2011/65/UE,(UE) 2015/863 astfel a fost modificată Directiva privind limitarea utilizării anumitor substanțe periculoase în echipamentele electrice și electronice
2006/42/EG als geänderte Maschinenrichtlinie
2014/30/EU in der geänderten Richtlinie Elektromagnetische Verträglichkeit
2000/14/EG in der geänderten Richtlinie über Lärmimflug im Freien
2011/65/EU,(EU) 2015/863 als geänderte Richtlinie Beschränkung der Verwendung bestimmter gefährlicher Stoffe in Elektro- und Elektronikgeräten
Directiva sobre maquinaria modificada 2006/42/CE
2014/30/UE modificada Directiva Compatibilidad electromagnética
2000/14/CE modificada Directiva sobre ruido al aire libre
2011/65/UE,(UE) 2015/863 modificada Directiva Restricción del uso de determinadas sustancias peligrosas en equipos eléctricos y electrónicos

Measured Sound Power Level	Guaranteed Sound Power Level
Le niveau de puissance acoustique mesuré	Le niveau de puissance acoustique garant
Zmierzony poziom mocy akustycznej	Gwarantowany poziom mocy akustycznej
Nivel de putere acustică măsurat	Nivel de putere acustică garantat
Gemessener Schallleistungspegel	Garantierter Schallleistungspegel
Nivel de potencia sonora medido	Nivel de potencia sonora garantizado
Nível de potência sonora medido	Nível de potência sonora garantido
: 90.3 dB(A)	: 93 dB(A)

References to the relevant harmonised standards used or references to the other technical specifications in relation to which conformity is declared:
Références des normes harmonisées pertinentes appliquées, y compris la date de celles-ci, ou des autres specifications techniques, y compris la date de celles-ci, par rapport auxquelles la conformité est déclarée:
Odwołania do odnośnych norm zharmonizowanych, które zastosowano, wraz z datą normy, lub do innych specyfikacji technicznych, wraz z datą specyfikacji, w odniesieniu do których deklarowana jest zgodność:
Trimiteri la standardele armonizate relevante folosite, inclusiv data standardului, sau trimiteri la celelalte specificații tehnice, inclusiv data specificațiilor, în legătură cu care se declară conformitatea:
Angabe der einschlägigen harmonisierten Normen, die zugrunde gelegt wurden, oder Angabe der anderen technischen Spezifikationen, in Bezug auf die die Konformität erklärt wird:
Referencias a las normas armonizadas pertinentes utilizadas, incluidas las fechas de las normas, o referencias a las otras especificaciones técnicas, incluidas las fechas de las especificaciones, respecto a las cuales se declara la conformidad:
Referências às normas harmonizadas aplicáveis utilizadas, incluindo a data da norma, ou às outras especificações técnicas, incluindo a data da especificação, em relação às quais é declarada a conformidade:

EN 60335-1:2012/A14:2019	EN 55014-1:2017
EN 60335-2-79:2012	EN 55014-2:2015
EN 62233:2008	EN 61000-3-2:2014
EN 60704-1:2012	EN 61000-3-3:2013
EN ISO 3744:2010	EN 61000-3-11:2000

Where applicable, the notified body TUV SUD Product Service GmbH;Munich Germany performed MD/EMC and issued the certificate: M8A 018081 0743/ E8A 018081 0752
Le cas échéant, l'organisme notifié TUV SUD Product Service GmbH;Munich Germany a effectué MD/EMC et a établi le certificate: M8A 018081 0743/ E8A 018081 0752
W stosownych przypadkach jednostka notyfikowana TUV SUD Product Service GmbH;Munich Germany przeprowadziła MD/EMC i wydała certyfikat: M8A 018081 0743/ E8A 018081 0752
După caz, organismul notificat TUV SUD Product Service GmbH;Munich Germany a efectuat MD/EMC și a emis certificatul: M8A 018081 0743/ E8A 018081 0752
Falls zutreffend — Die notifizierte Stelle TUV SUD Product Service GmbH;Munich Germany hat MD/EMC … und folgende EU-Baumusterprüfbescheinigung ausgestellt: M8A 018081 0743/ E8A 018081 0752
Si procede, el organismo notificado TUV SUD Product Service GmbH;Munich Germany ha efectuado MD/EMC y expide el certificado: M8A 018081 0743/ E8A 018081 0752
Se for esse o caso, o organismo notificado: TUV SUD Product Service GmbH;Munich Germany efetuou MD/EMC e emitiu o certificado: M8A 018081 0743/ E8A 018081 0752

Signed for and on behalf of/Signé par et au nom de/Podpisano w imieniu/Semnat pentru și în numele/Unterzeichnet für und im Namen von/ Firmado en nombre de/Assinado por e em nome de:

Kingfisher International Products B.V.,
Rapenburgerstraat 175E,
1011 VM Amsterdam,
The Netherlands

David Awe
Group Quality & Sustainability Director : 23-06-2020

Manufacturer,Fabricant,Producent,
Producător,Fabricante:

UK Manufacturer:
Kingfisher International Products Limited
3 Sheldon Square
London
W2 6PX
United Kingdom

EU Manufacturer:
Kingfisher International Products B.V.
Rapenburgerstraat 175E
1011 VM Amsterdam
The Netherlands

EN

www.diy.com
www.screwfix.com
www.screwfix.ie

To view instruction manuals online,
visit www.kingfisher.com/products